ECN	REV	DESCRIPTION	DATE	APPROVED

1.芯 数/NO.of contacts

系 列/Series	303	304	305	306	308
孔位排列/Pin Number					
适配线缆/Conductor size	24AWG	24AWG	24AWG	26AWG	26AWG
导体直径/Pin size	1.0mm	1.0mm	1.0mm	0.7mm	0.6mm
额定电流/Rated current	3A	3A	3A	1A	1A
额定电压/Rated voltage	60V	30V	30V	30V	30V

2.绝缘体型号/Insulator Coded

Coded	A	B
型号		

3.面板开孔/RECOMMENDED PANEL CUT-OUT

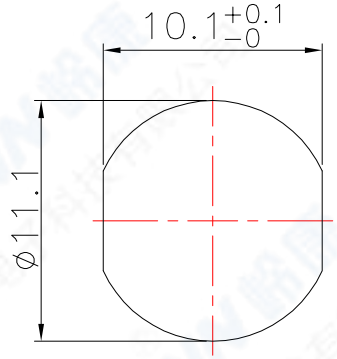

4.编码原则/Part Number

浮动式插头/Free Plug M8F 0 304 A F L L G1

- 主型号/Type
- 外观/Appearance:0=Standard
- 针数/Pin Number
- 绝缘体型号/Insulator coded:A、B
- 绝缘体型号/Insulatortype:F=Female
- 针类型/Sold Tpye:L=Turning
- 针长度/Pin Length:S=Short、L=Long
- 表面处理/Plating:Gold Flash

5.技术特性/Technical Characteristics

1.寿命/Durability: >1000 mate/unmate cycles
2.Pin接触电阻/ Pin Contact Resistance：≤10 mΩ
3.绝缘电阻/Nsulation Resistance：≥ 100 MΩ
4.温度等级/Rated Temperature: -25˚C,+80˚C
5.盐雾/Corrosion Resistance: Salt spray test,>48h
6.防水等级/Waterproof: IP67

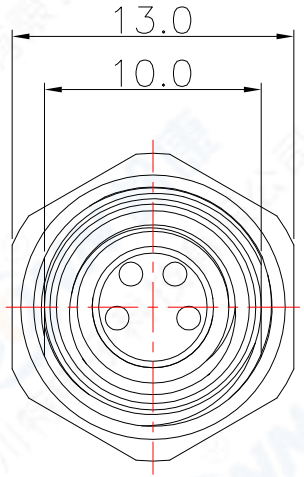

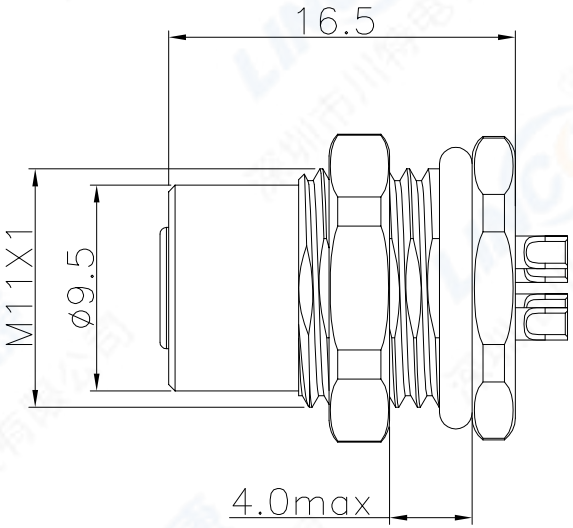

序号ITEM	名称 & 规格/Name & Description
5	六角螺母/Hexagonal nut: 黄铜镀镍/Brass,Nickel plated
4	母针芯/PIN: 磷銅鍍金/Phosphor copper,G/F
3	外壳/Outer Shell: 黄铜镀镍/Brass,Nickel plated
2	密封圈/O-RING: Rubber
1	绝缘体/Insulator: PA BLACK

SCALE	TOLERANCES ARE: DECIMALES .X ± 0.2 .XX ± 0.1	ANGLES ±	TITLE: 固定式插座/Fixed socket
F			
SHEET / DIMENSION	APPROVALS	DATE	PART NO. M8F0304AFLLG1 / REV. *
1 OF 1 / MM	APPROVED:		
DWG NO. / REV.	CHECKED:		LINCONN Linconn Elc Tech Co.,LTD
M8F / A0	CHECKED:		
	DRAWN: S.peng	03/24/2014	